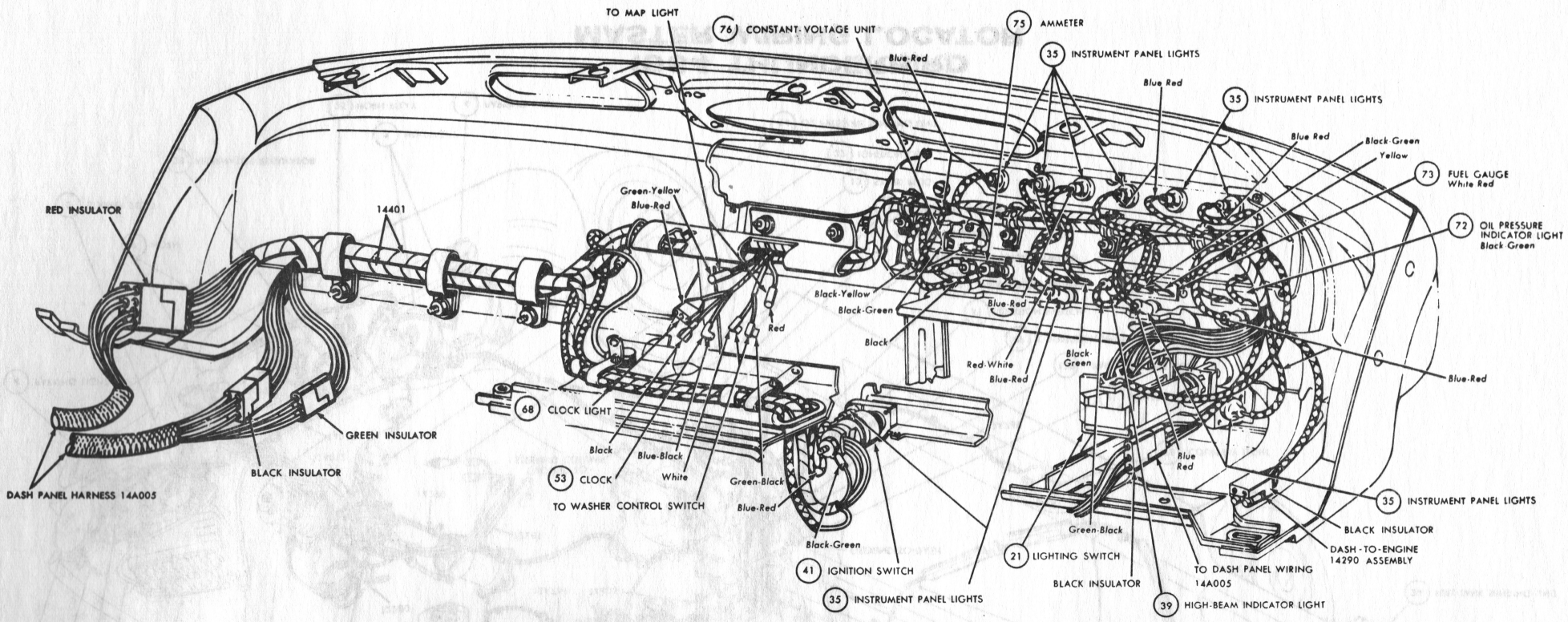

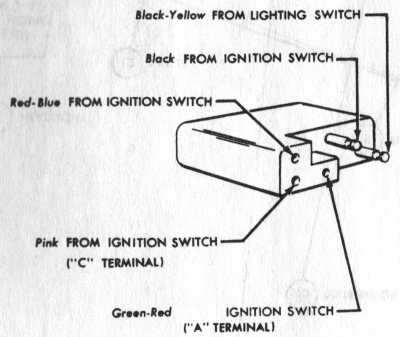

COWL SIDE

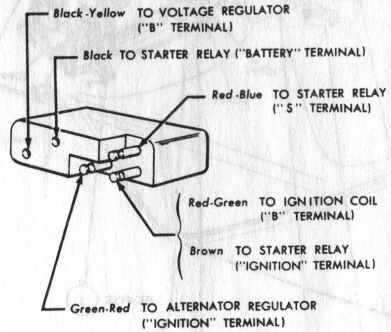

ENGINE SIDE

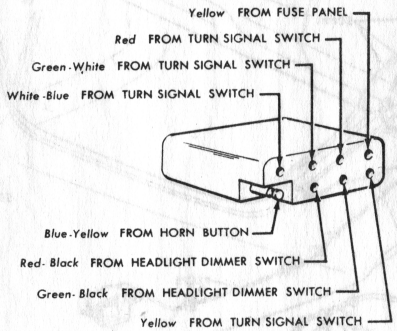

COWL SIDE

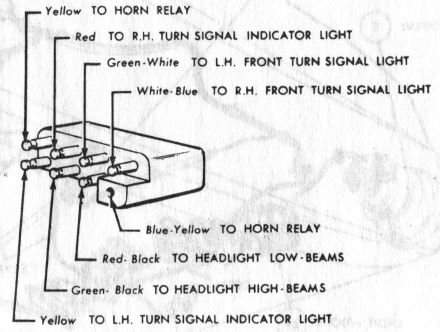

ENGINE SIDE

1964 THUNDERBIRD INSTRUMENT PANEL WIRING